bottom view

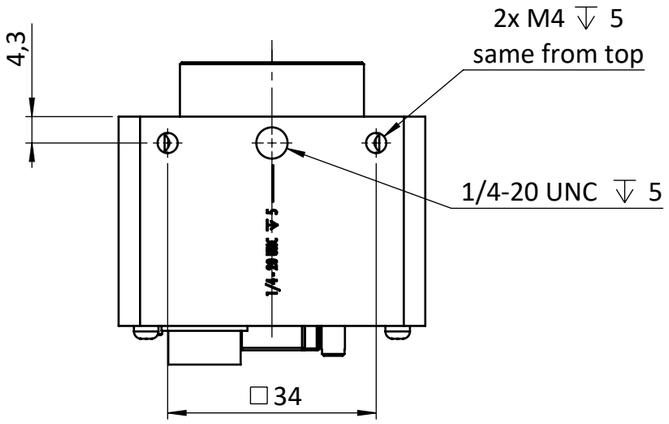

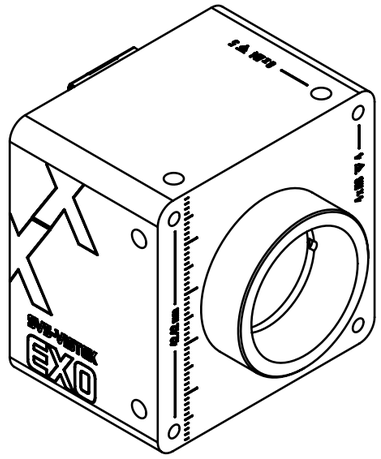

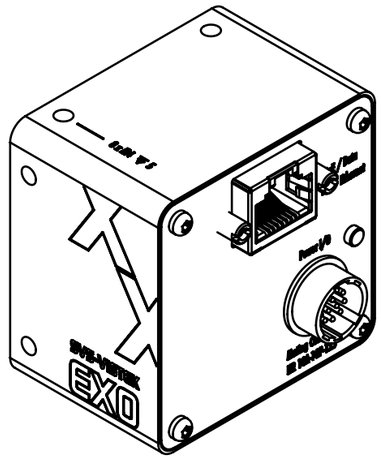

right view

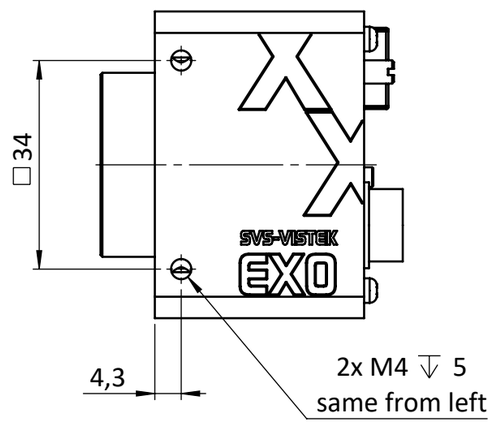

front view

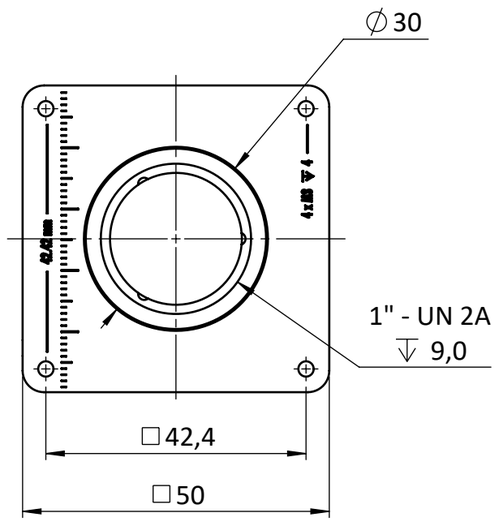

left view

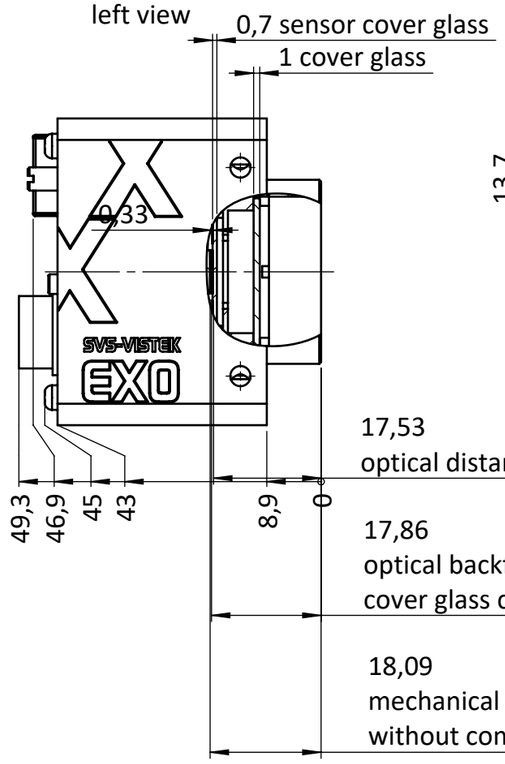

back view

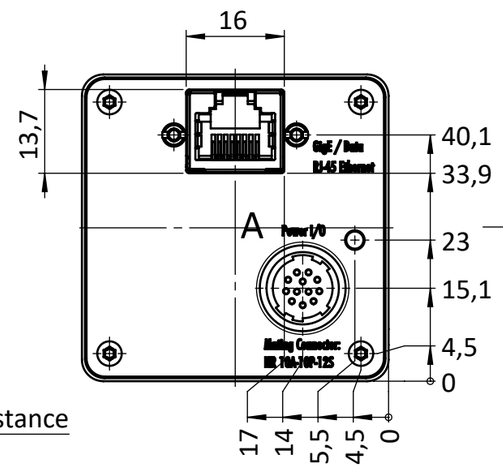

	Hirose Pinout EXO, HR (CL Deca, CXP), SHR
Pin	Signal EXO, HR (CL Deca, CXP), SHR
1	V IN- (GND)
2	V IN+ (10 - 25V)
3	IN 4 RxD (RS232)
4	OUT 4 TxD (RS232)
5	IN 1 (0 - 24V)
6	IN 2 (0 - 24V)
7	OUT 1 (open drain)
8	OUT 2 (open drain)
9	IN 3+ (opto IN+)
10	IN 3- (opto IN-)
11	OUT 3 (open drain)
12	OUT 0 (open drain)
	Shielding

Hirose Connector

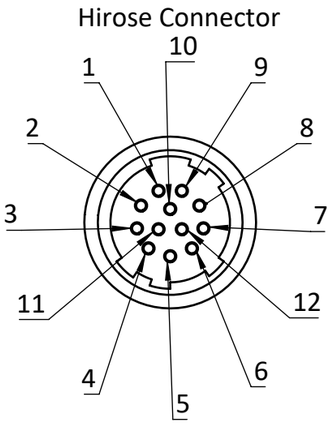

DETAIL A
MAßSTAB 2 : 1

top view

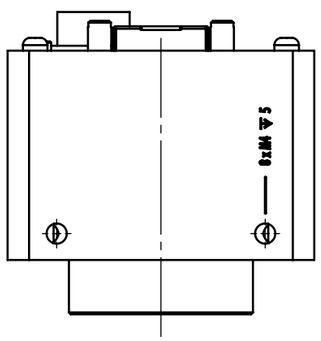

drawing applies to cameras
EXO250xGE
EXO264xGE
EXO265xGE

SVS-VISTEK

all dimensions in mm unless otherwise specified

Scale: 1:1

Rev.: 1

Customer Interface Drawing

	Name	Sign.	Date
Drawn	S.Seiler		30.09.2021
Checked			

Title:
EXO250_264_265xGE_POE

Material:

Material No.:

A3

Weight:

Blatt / Sheet 1 / 1